FISHER & PAYKEL

612L SERIES 7
FRENCH DOOR
REFRIGERATOR FREEZER
ICE & WATER

27077-A RF600ADUX1

SPARE PART GUIDE

AA

INTRODUCTION

Voltage

220 –240 50Hz

Kit parts

Where a part number is shown against the descriptions for kit components, they are also available as separate items. In addition, some parts may be supplied with these kits that are not available as separate items, and are therefore either not listed, or a part number is not shown against the part description in this guide.

Part list key

You may see one or more 'keys' in the first column of the part list tables, see below for explanations:

NI	Indicates the part is not illustrated in the diagram.
NOT USED	Indicates the diagram part is not used in this manual.
NS	Indicates the part is not servicable.
NM	Not available for this model.

For more information about our products and services, and for detailed contact information, visit our website:

NZ https://www.fisherpaykel.co.nz
AU https://www.fisherpaykel.com.au

CONTENTS

DOOR SHELVES COMPONENTS 3

INTERNAL CABINET COMPONENTS 7

EXTERNAL COMPONENTS 9

WATER CONNECTION COMPONENTS 13

DOOR SHELVES COMPONENTS

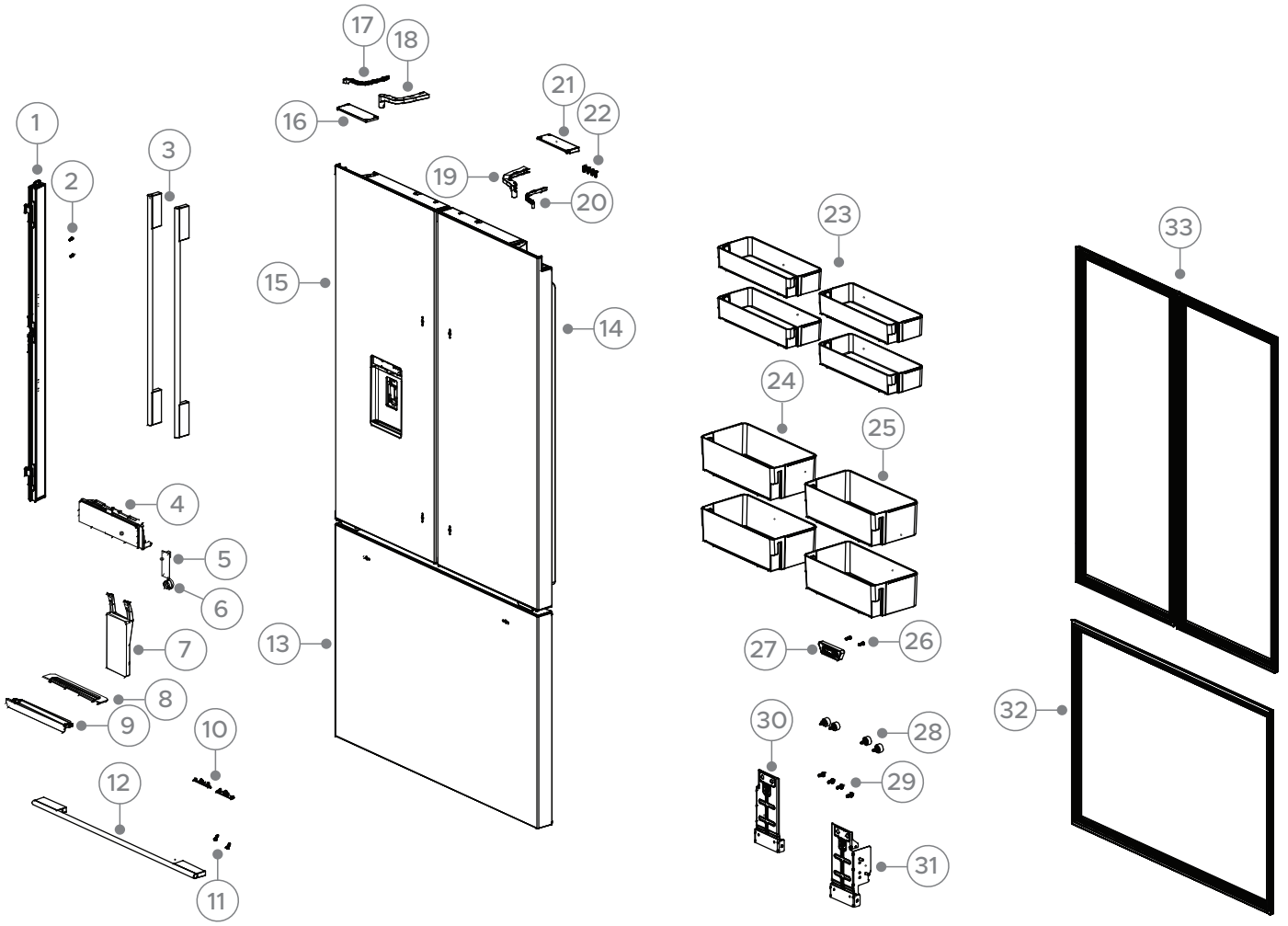

DWG 007614

DOOR SHELVES COMPONENTS

REF	PART NUMBER	PART DESCRIPTION
1	H0060888797	FLAPPER ASSY SS
2	H0060801021	SCREW
3	H0060888793	HANDLE ASSY SS
4	H0060866169D	DISPLAY WATER SS
5	H0064002047	SWITCH WATER
6	H0060121724	SPRING WATER DISPENSER LEVER
7	H0060271855	PADDLE DISP SS
8	H0060247219A	COVER WATER TRAY DRIP GREY
9	H0060272108	BASE WATER TRAY DRIP GREY
10	H0060858426A	LAMP FREEZER
11	H0262990018	SCREW SHEET METAL
12	H0060888795	HANDLE FREEZER SS
13	H0060888700	DOOR FREEZER SS
14	H0060888699	DOOR RH REF SS
15	H0060888697	DOOR LH DISP REF SS
16	H0060271798	COVER HINGE DOOR LEFT SS
17	H0060272006	COVER LOWER LH ARM SERVICE SS
18	H0060271863	COVER UPPER LH ARM SERVICE SS
19	H0060272670	COVER UPPER RH ARM SERVICE SS
20	H0060272669	COVER LOWER RH ARM SERVICE SS
21	H0060271799	COVER HINGE DOOR RIGHT SS
22	H0064082855	SCREW CROSS GROOVE SELF ATTACH
23	H0060266234	SHELF DOOR BM SMALL
24	H0060271789	SHELF DOOR GALLON LH
25	H0060271790	SHELF DOOR GALLON RH
26	H0060600097	SCREW
27	H0060889384	MODULE ASSY MAGNETIC
28	H0060261562A	MOUNT COMPRESSION DRAWER FC
29	H0060802013	SCREW
30	H0060880681	BRACKET RAIL SLIDE LH
31	H0060880682	BRACKET RAIL SLIDE RH
32	H0060874748DJ	GASKET DOOR FRZ SS
33	H0060874748DG	GASKET DOOR REF SS

INTERNAL CABINET COMPONENTS

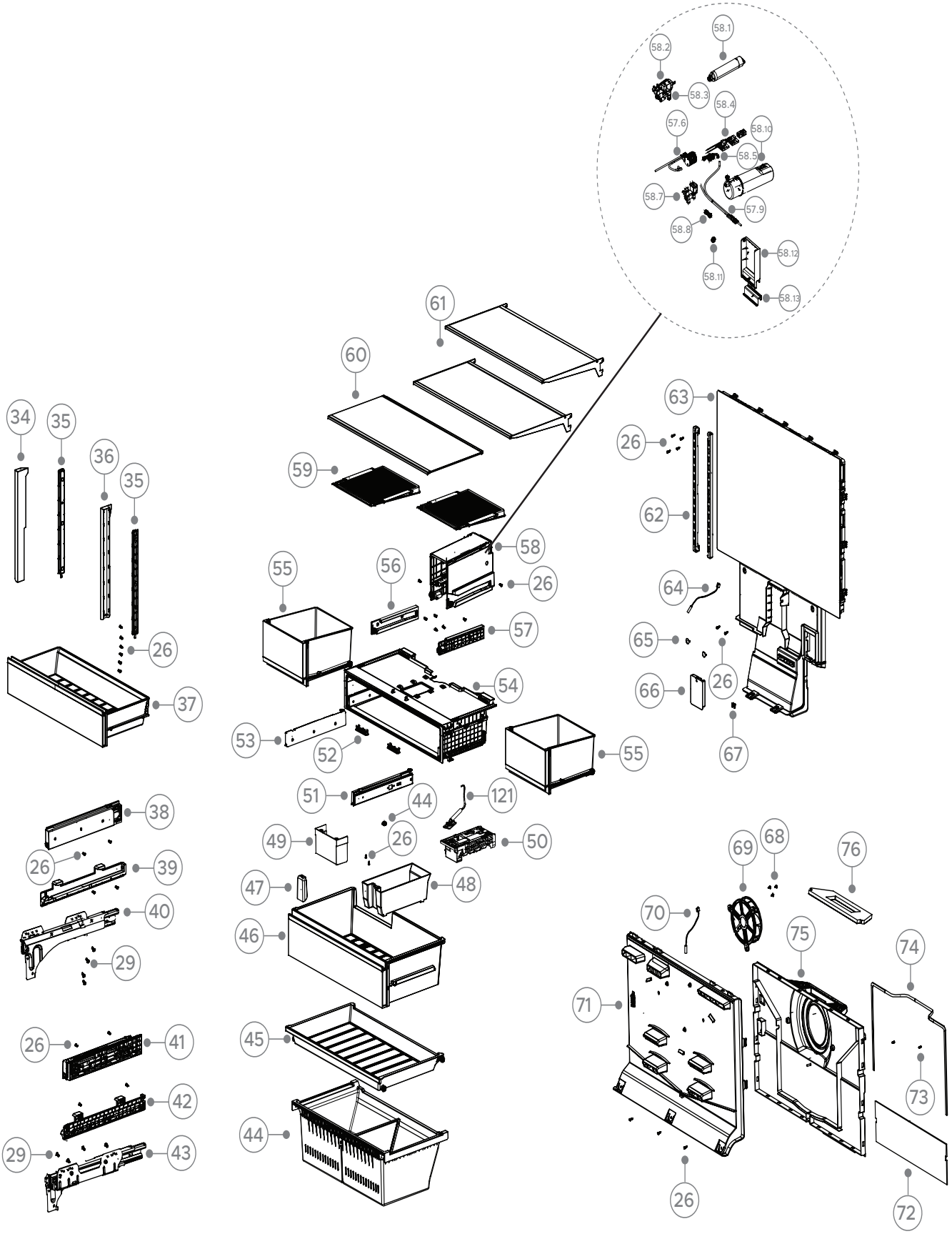

DWG 007617

INTERNAL CABINET COMPONENTS

REF	PART NUMBER	PART DESCRIPTION
34	H0060271841	TRIM LINER LH BIN LOWER
35	H0060271832	RETAINER BIN LOWER INNER
36	H0060271842	TRIM LINER RH BIN LOWER
37	H0060889385	BIN LOWER PC
38	H0060867245B	SLIDE RAIL LH ASSY
39	H0060889382	MOUNT TRAY MID FC LH REF
40	H0060852558L	SLIDE RAIL LH LOWER FC ASSY
41	H0060867246B	SLIDE RAIL RH ASSY
42	H0060889383	MOUNT TRAY MID FC RH REF
43	H0060852559L	SLIDE RAIL RH LOWER FC ASSY
44	H0060889388	BIN LOWER FC
45	H0060889381	TRAY MID FC
46	H0060889216	BIN TOP FC
47	H0060235014	SCOOP ICE
48	H0060271938	BIN ICE
49	H0060271767	COVER ICEMAKER SINGLE
50	H0060884795	ICEMAKER LARGE ICE ASSY
51	H0060846936B	SLIDE PC RH
52	H0060888653	LIGHT DISPLAY IW
53	H0060846935B	SLIDE PC LH
54	H0060889386	HOUSING DRAWER PC
55	H0060886578A	DRAWER VEGE PC REF
56	H0060888813	TRACK ROLLER REF LH ASSY
57	H0060888814	TRACK ROLLER REF RH ASSY
58	H0060890144A	MODULE WATER PLUMBED ASSY
58.1	847200	FILTER WATER REF FWC3
58.2	H0064002383D	VALVE WATER
58.3	H0060237008	ADAPTOR VALVE
58.4	H0060406178	CABLE CONNECTING
58.5	H0060269831	JOINT ASSEMBLY
58.6	H0060236202J	BASE FILTER ASSY
58.7	H0064003330	VALVE WATER
58.8	H0060236007	CONNECTOR WATER
58.9	H0060268267B	HOSE CONNECTING WATER TANK
58.10	H0060883607	TANK WATER
58.11	H0060230195	WHEEL
58.12	H0060138109B	COVER
58.13	H0060271760	COVER

INTERNAL CABINET COMPONENTS

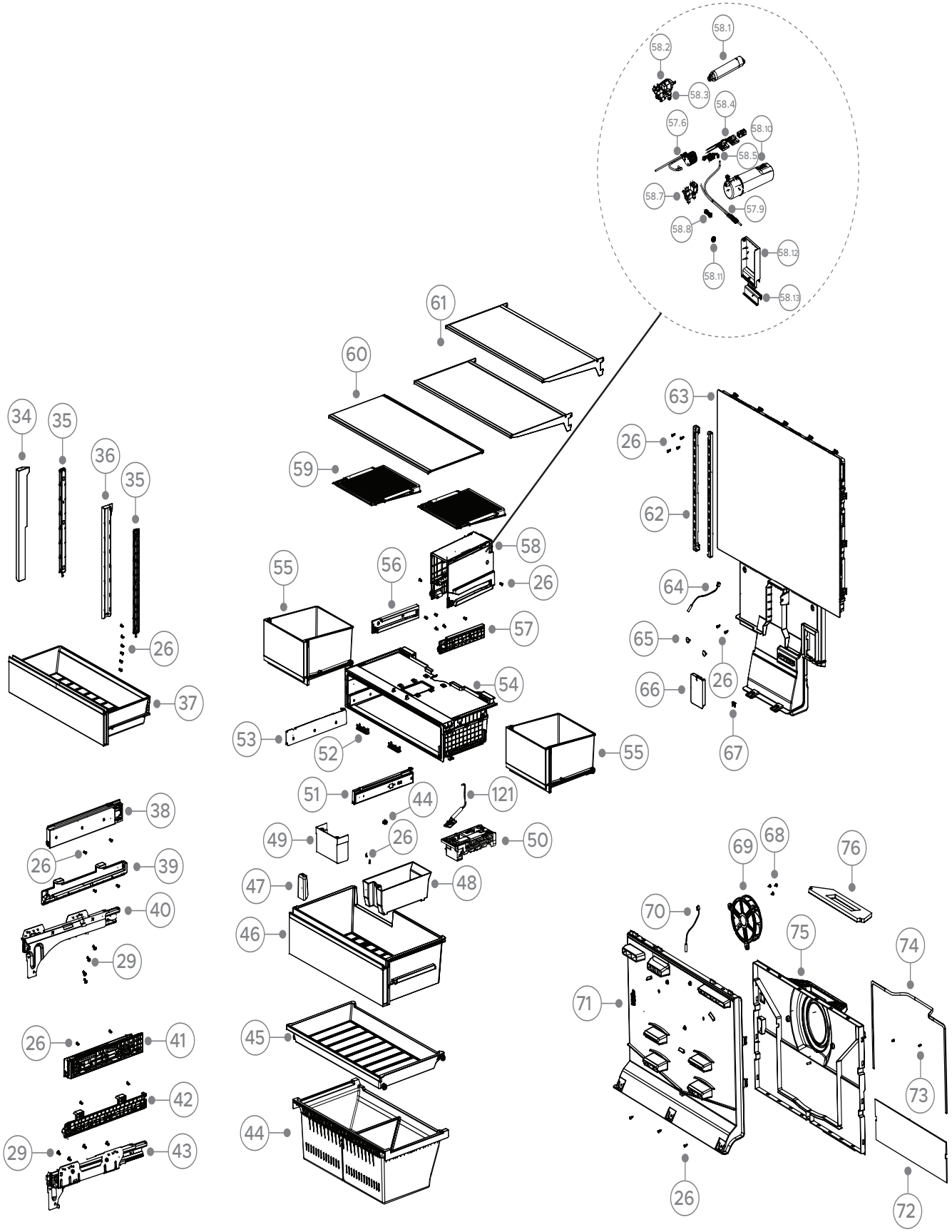

DWG 007617

INTERNAL CABINET COMPONENTS

REF	PART NUMBER	PART DESCRIPTION
59	H0060269046	LID HUMIDITY CONTROL
60	H0060886575B	SHELF FIXED ASSY
61	H0060889180	RACK CANTILEVER ASSY
62	H0060129138	RAIL CANTILEVER
63	H0060889358	DUCT PC AIR REF ASSY
64	H0060401425D	SENSOR FRIDGE
65	H00602160304	CAP SCREW
66	H0060235282	COVER HARNESS AIR DUCT
67	H0060600121	SCREW
68	H0060600002	SCREW
69	H00640021615	FAN COMPACT REF
70	H0060401766	SENSOR (INCLUDES CABLE)
71	H0060271792	COVER DUCT FC FRONT
72	H0060318180	INSULATION DUCT FOAM
73	H0060802008	SCREW
74	H0060305050	STRIP FOAM
75	H0060271793	COVER BACK FC DUCT AIR
76	H0060318701	SEAL PC DELIVERY
121	H0060887100	OUTLET WATER CUBE

EXTERNAL COMPONENTS

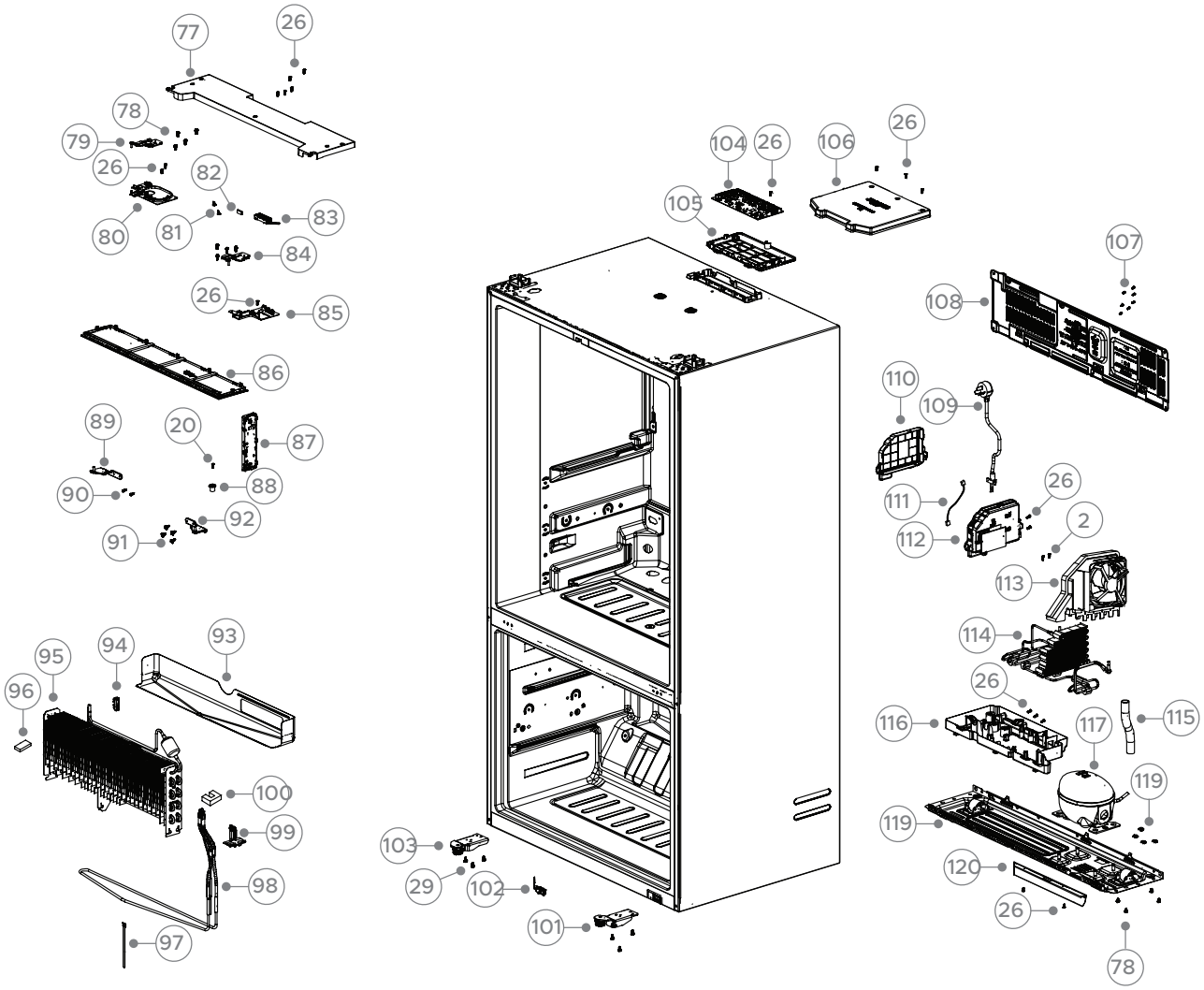

DWG 007618

EXTERNAL COMPONENTS

REF	PART NUMBER	PART DESCRIPTION
77	H0060271809	COVER HINGE SS
78	H0060600251	SCREW
79	H0060139284	HINGE LH UPPER
80	H0060271807	GUIDE CABLE HINGE LH UPPER SS
81	H0064001332A	SENSOR DOOR PC
82	H0064002683	SENSOR HUMIDITY
83	H0061801208	MODULAR WIFI
84	H0060139285	HINGE RH UPPER
85	H0060272007	GUIDE CABLE HINGE RH UPPER SS
86	H0064003283A	LIGHT CEILING PANEL
87	H0060887919A	BOARD DISPLAY
88	H0060245123	MOUNT CENTER HOUSING PC
89	H0060136812A	HINGE CENTRE LH
90	H0064082808	SCREW
91	H0060600429A	SCREW MID HINGE
92	H0060136812	HINGE CENTRE RH
93	H0060135112A	SHIELD DRAIN FC
94	H0060264623	SENSOR DEFROST
95	H0060708631	EVAPORATOR
96	H0060313178A	BLOCK PE
97	H0060707720	STRIP CONDUCTION HEAT
98	H0064001579E	HEATER DEFROST
99	H0060272237	CLIP DEFROST WIRE
100	H0060313179	BLOCK PE FC RH
101	H0060890337	BASE FOOT RH
102	H0064000326A	SWITCH PLUNGER FC
103	H0060890340	BASE FOOT LH
104	H0061801509R	BOARD CONTROL MAIN PLUMBED
105	H0060271092	BRACKET CONTROL BOARD MAIN
106	H0060271093	LID CONTROL BOARD MAIN
107	H0064098059	SCREW
108	H0060888428	COVER COMP
109	H0060401749AH	CABLE POWER AU/NZ
110	H0060268185A	COVER MODULE POWER
111	H0060406130	HARNESS POWER PLUMBED
112	H0061801559K	MODULE POWER INVERTER PLUMBED

EXTERNAL COMPONENTS

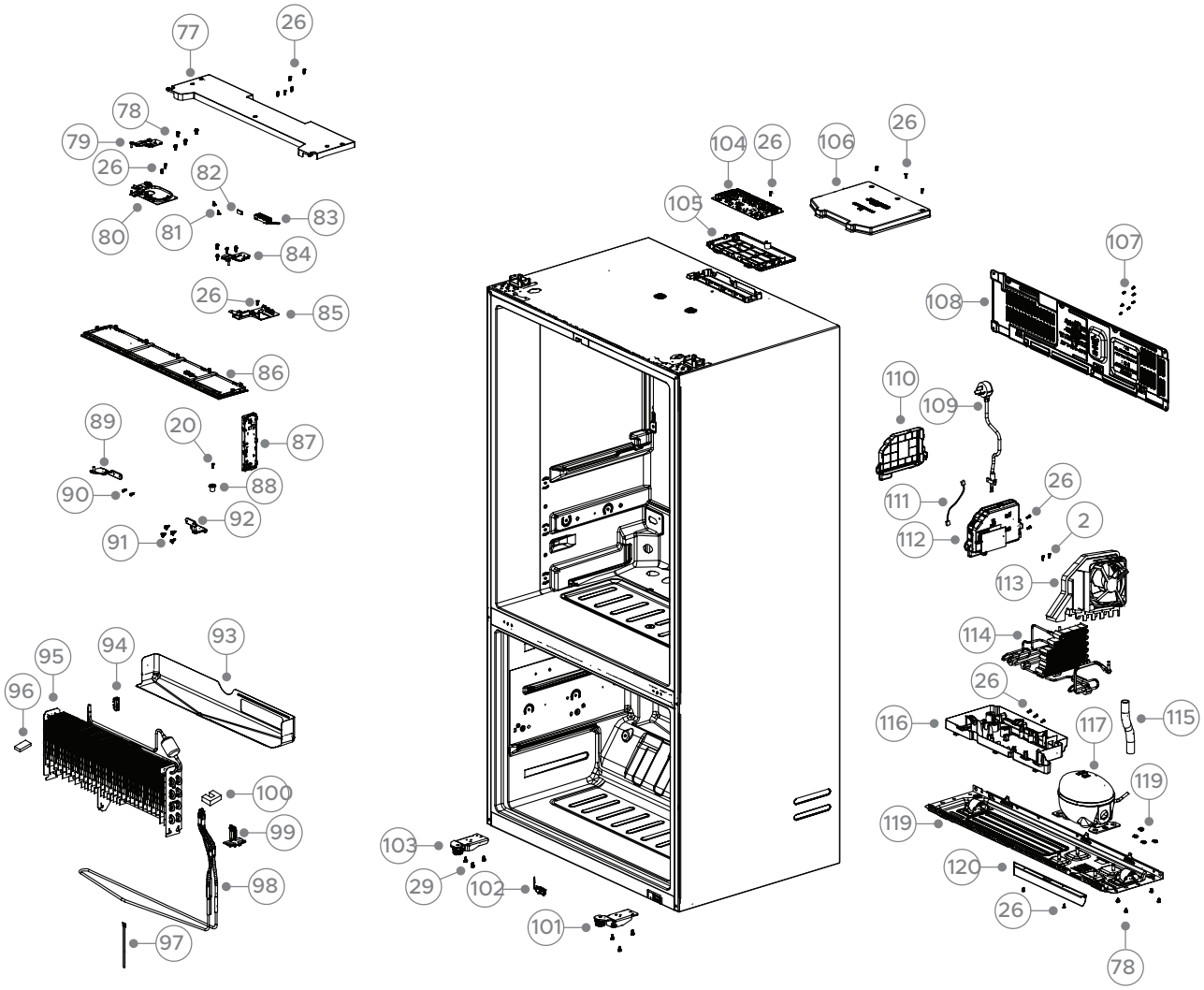

DWG 007618

EXTERNAL COMPONENTS

REF	PART NUMBER	PART DESCRIPTION
113	H0060888266A	FAN COND ASSY
114	H0060707653C	CONDENSER MICROCHANNEL
115	H0060229679M	TUBE DRAIN
116	H0060270387	TRAY EVAP
117	H0060708616	COMPRESSOR
118	H0060112284	FIXING CLAMP
119	H0060888427	TRAY COMP 905
120	H0060250790K	SEAL AIR DIVIDER FLOOR

WATER CONNECTION COMPONENTS

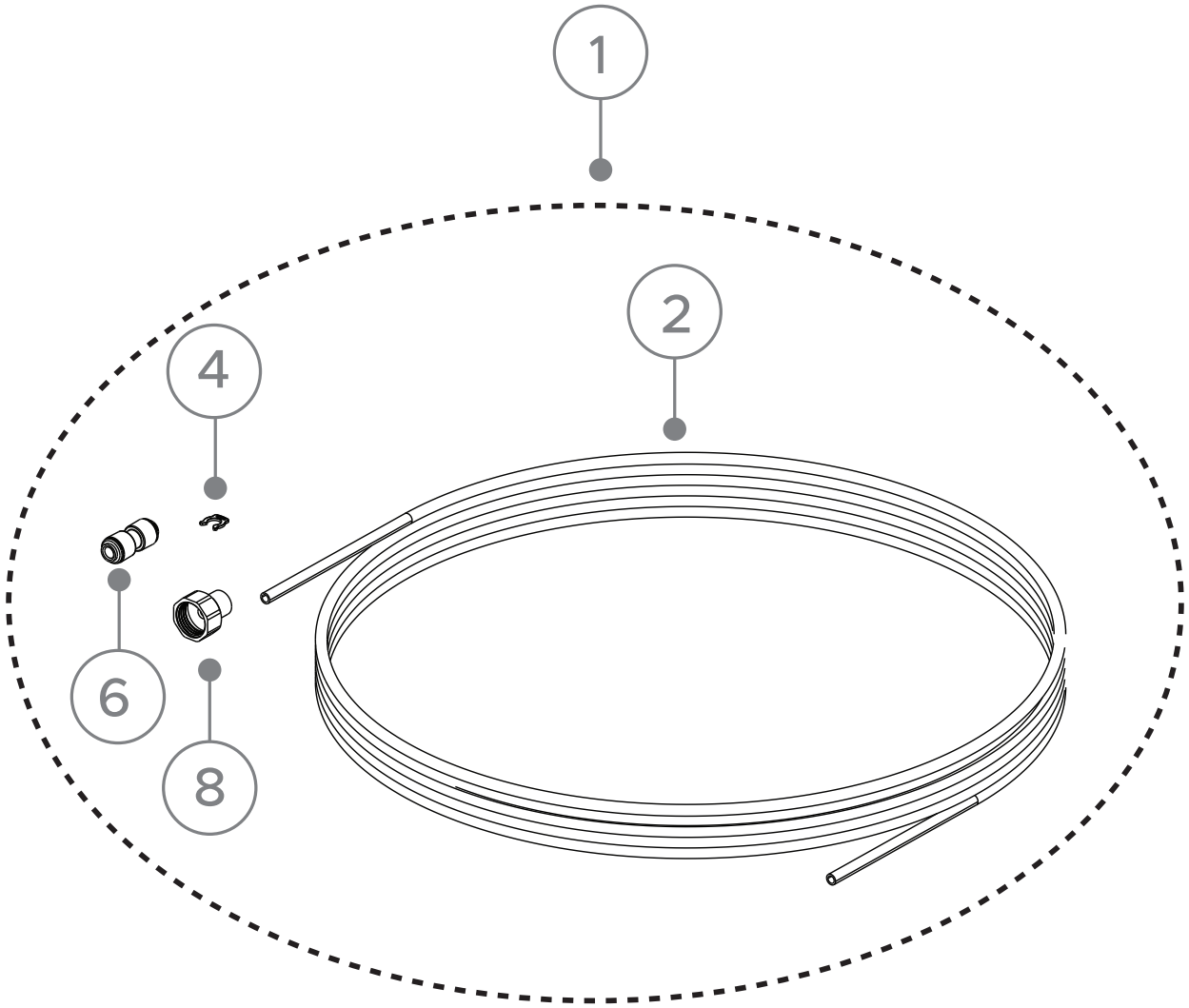

DWG 007635

WATER CONNECTION COMPONENTS

REF	PART NUMBER	PART DESCRIPTION
1	**849850P**	KIT CONNECTION WATER AA QD
	includes 839111	CONNECTOR WATER STRAIGHT
	includes 312197	ADAPTOR TAP 1/4 OD X 1/2BSP
	includes 837193	CLIP COLLET LOCKING PIC1808R
	includes 836857	TUBE FILTER WATER 1/4" 4 MTR
2	**836857**	TUBE FILTER WATER 1/4" 4 MTR
4	**837193**	CLIP COLLET LOCKING PIC1808R
6	**839111**	CONNECTOR WATER STRAIGHT
8	**312197**	ADAPTOR TAP 1/4 OD X 1/2BSP

FISHERPAYKEL.COM

© Fisher & Paykel Appliances 2026. All rights reserved.

The models shown in this guide may not be available in all markets and are subject to change at any time.

The product specifications in this guide apply to the specific products and models described at the date of issue. Under our policy of continuous product improvement, these specifications may change at any time.

For current details about model and specification availability in your country, please go to our website or contact your local Fisher & Paykel dealer.

27077-A 09.26